R40
SM/UM/TM

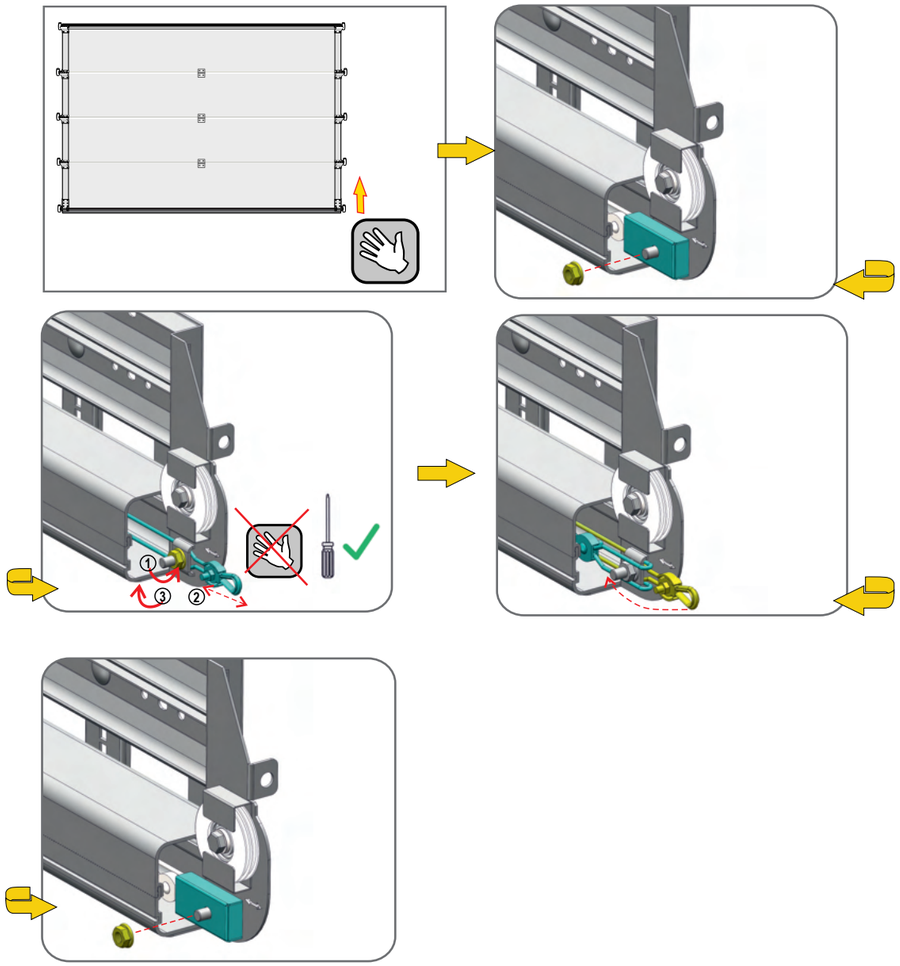

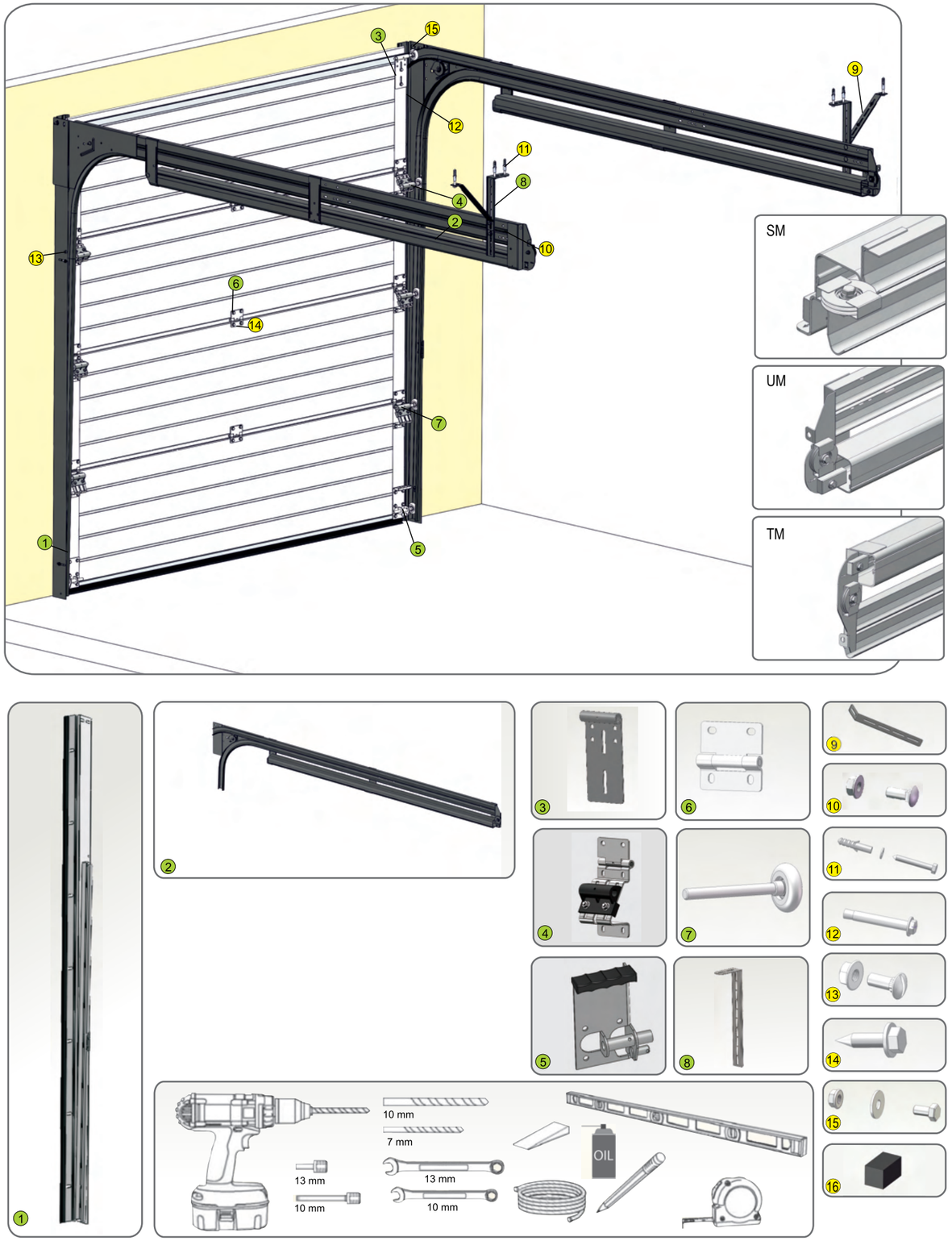

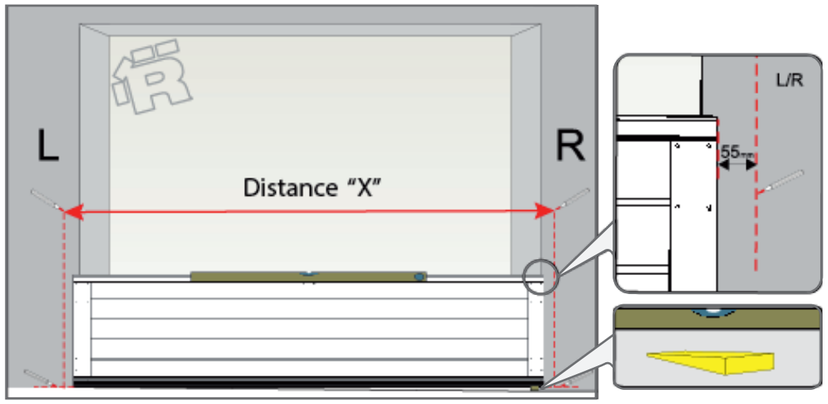
L
R
Distance "X"
L/R
55

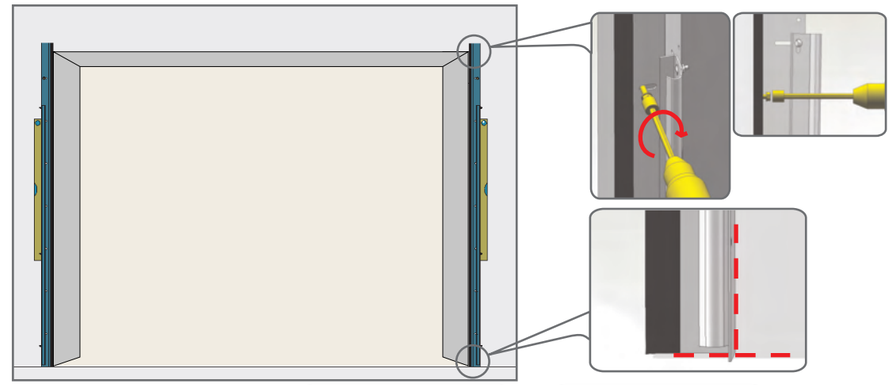

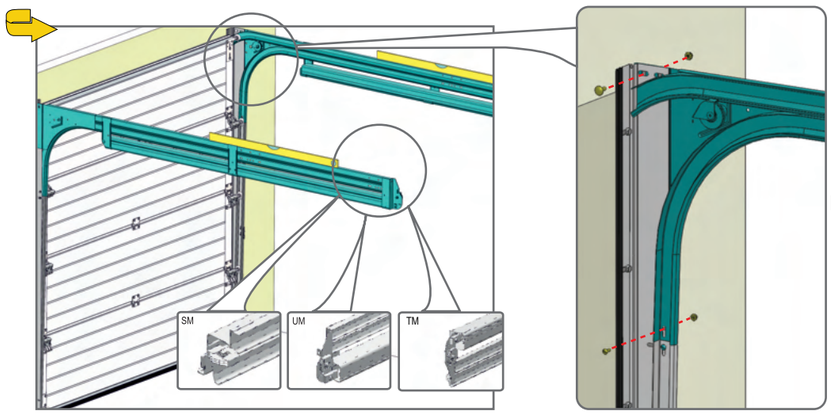
SM
UM
TM

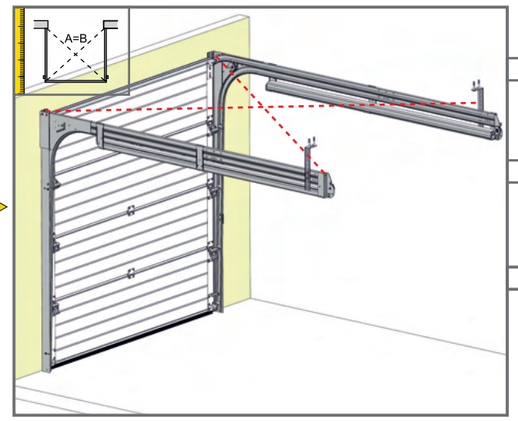
A=B

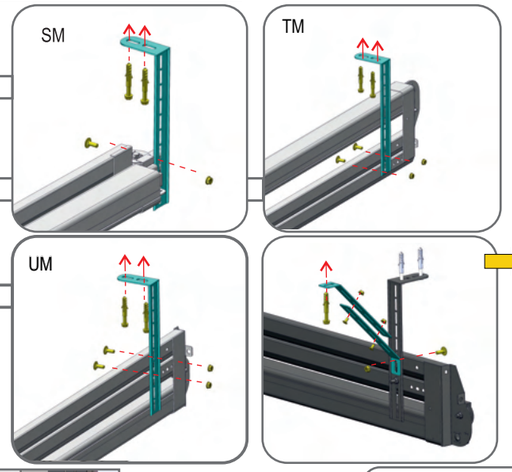
SM
TM
UM

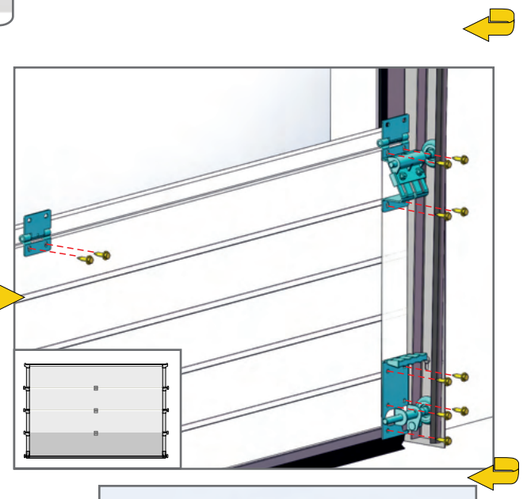

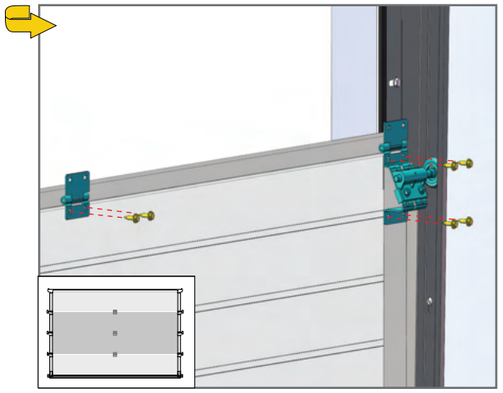

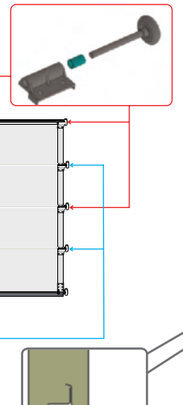

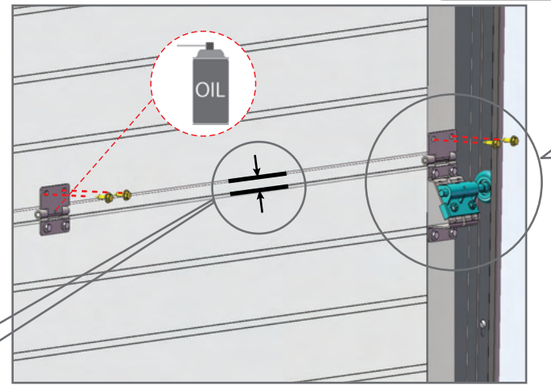
OIL

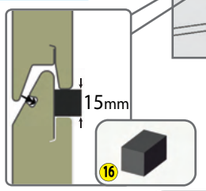
15mm
16

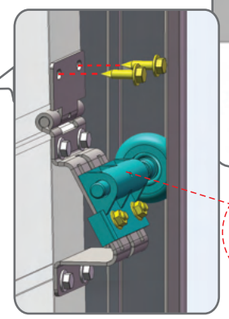

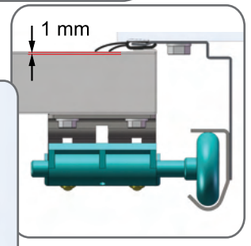
1 mm
OIL

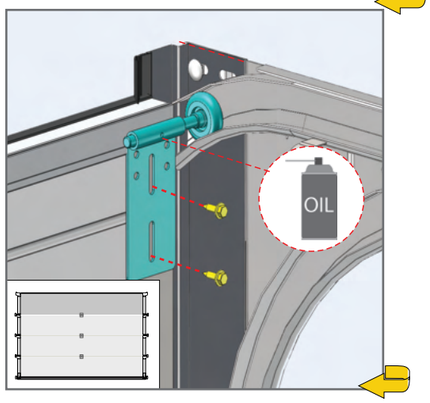
OIL

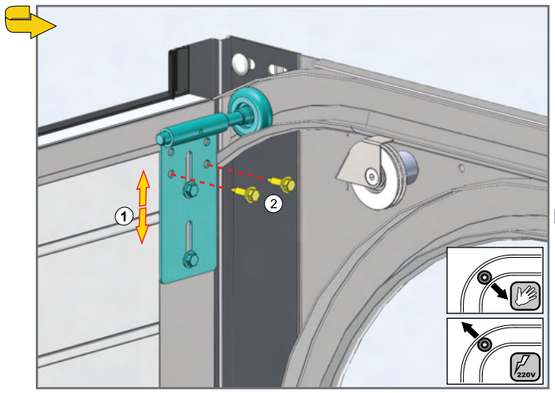
1
2
220V

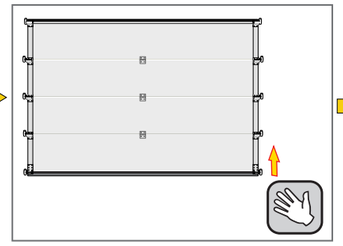

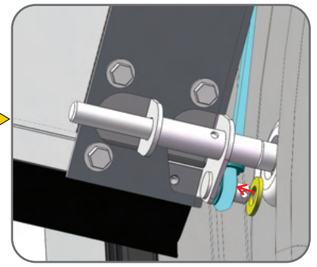

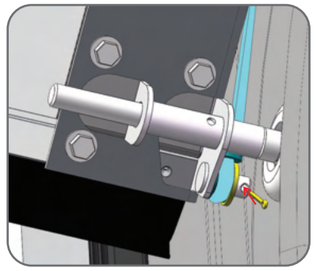

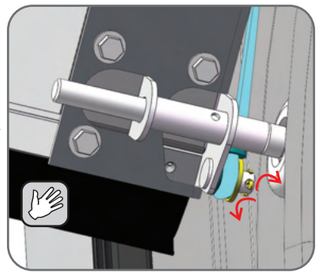

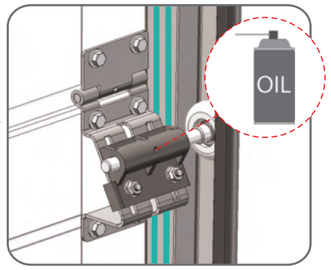
OIL